515PB12 WORKSHOP MANUAL

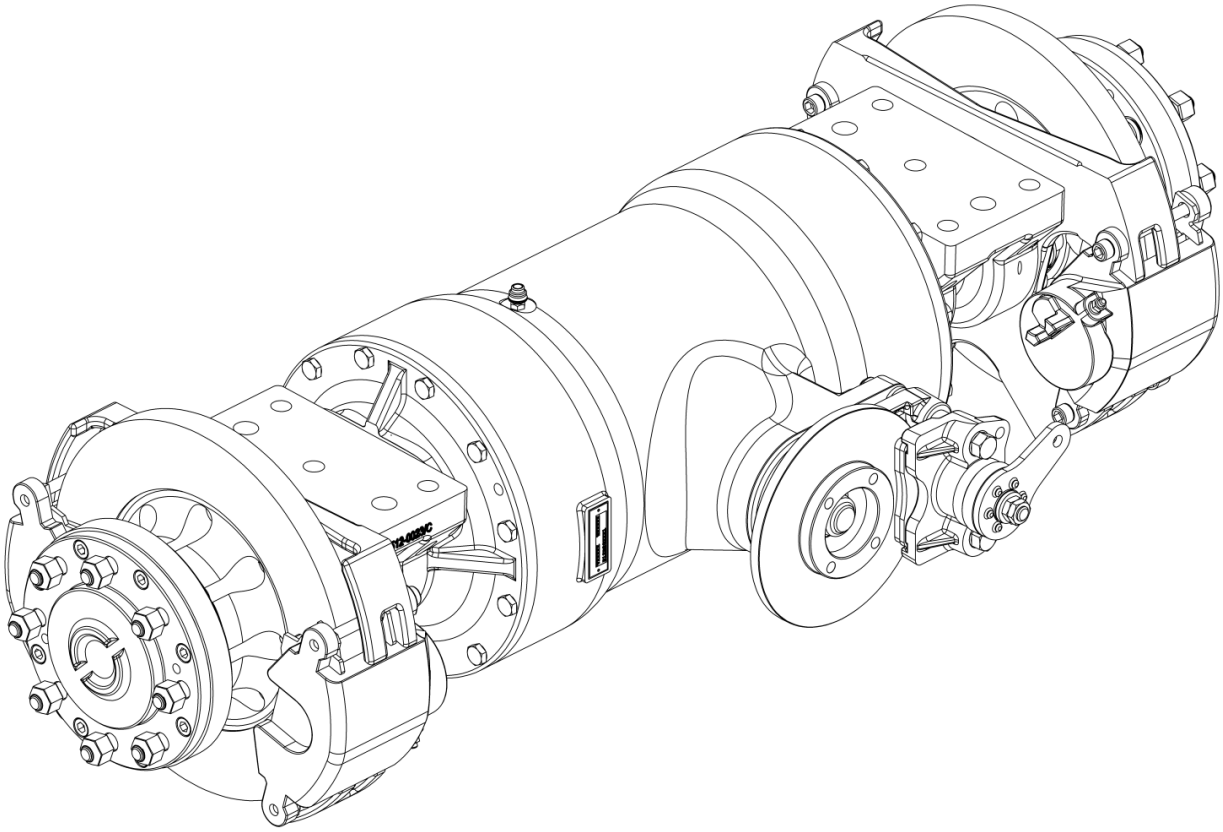

NEWAGE

PRM NEWAGE LIMITED
BARLOW ROAD
COVENTRY
CV2 2LD
ENGLAND

TELEPHONE: +44 (0)24 7661 7141
FAX: +44 (0)24 7661 1845
EMAIL: mail@prm-newage.com
WEBSITE: www.prm-newage.com

515PB12 Manual
Issue: 2.3
Created By: C Reynolds
Updated: February 2019

This manual contains proprietary information of PRM Newage Limited. It is intended solely for the information and use of parties operating and maintaining the equipment described herein. Such proprietary information may not be used, reproduced, or disclosed to any other parties for any other purpose without the express written permission of PRM Newage Limited.

PRM Newage Ltd operates a policy of product improvement and therefore reserves the right to change specifications without prior notification. Whilst every effort is made to ensure complete accuracy of the information in this manual no liabilities for inaccuracies or the consequences thereof can be accepted by the manufacturer or the distributor who supplied the manual.

The following international symbols are used in this service manual:

WARNING! THIS SYMBOL WARNS OF POSSIBLE PERSONAL INJURY

CAUTION! THIS SYMBOL WARNS OF POSSIBLE DAMAGE TO TRANSMISSION

CONTENTS

INTRODUCTION 5
GENERAL DATA 5
Description 5
Specification 5
Installation Drawing 6
IDENTIFICATION 7
GENERAL SERVICE INFORMATION 8
Routine Maintenance 8
Lubricants 8
Greases 8
Brake Fluid 8
Liquid Sealant 8
Fastener Tightening Torques 9
Axle Backlash 9
Tooling 9
SERVICING AND REPAIRS 13
Seals 13
Bearings 13
Cleaning 13
INSPECTION 14
Main Case and Arms 14
Gears 14
Bearings 14
Threaded Parts 14
PROCEDURES 14
Section 'A' – 512 Axle Assembly – Axle Shown with Pads Upwards 15
Track Width Option Component Table 16
Pinion Shimming Procedure 16
Section 'B' – Main Case and Differential Assembly 17
Servicing the Main Case and Differential Assemblies 18
Removing the Differential 18
Servicing the Differential Assembly 18
Section 'C' – Planet Carrier Assembly 19
Servicing the Planet Carrier Assemblies 20
Removing the Annulus Gear 21
Section 'D' – Axle Arm, Hub and Brake Assemblies 21
Servicing the Axle Arm, Hub and Brake Assemblies 22

Servicing the Brake Assemblies 23
Section 'E' – Park Brake Assembly 24
Servicing the Park Brake Assembly....24
Replacing the Park Brake Caliper Pads....25
Section 'F' – Park Brake Overhaul 26
NOTE: THE PARTS ABOVE ARE NOT AVAILABLE INDIVIDUALLY AND ARE SHOWN FOR ILLUSTRATION PURPOSES ONLY EXCEPT FOR THE * E9.4 REPLACEMENT BRAKE LINING AND CARRIER ASSEMBLY SUPPLIED AS 613-2530-KIT. 27
Mounting Procedure 27
Adjustment Procedure 27
Lining Replacement 27
SPARES KITS....29
SPIRAL BEVEL GEAR TOOTH CONTACT....32
Correct Pattern....32
Incorrect Pattern....32
Appendix 1 33
Appendix 2 34
NOTES 35

INTRODUCTION

Spare parts for Newage axles may only be obtained from the original equipment manufacturer and not directly from Newage. Always quote your vehicle/machine serial number and axle serial number – see section titled 'Identification'.

If possible, the repair/service should be carried out in a clean environment. Where this is not possible and the work must be completed on site, appropriate measures must be taken to ensure that dirt or foreign matter does not enter the unit. Newage axles are designed to operate in the arduous conditions found in the construction industry; providing they are maintained regularly they will provide the service our customers expect from Newage products.

Towing:- Please ensure the Park Brake is fully disconnected from the Rotor prior to towing. The max axle tow angle is 10 degrees at a max 25 MPH wheel speed.

GENERAL DATA

Description

The 515 series axle is a double reduction unit featuring a Hydraulic Disc Braking system.

The 1st reduction Spiral Bevel Pinion and Crown Wheel driving a 4 Pinion Differential. Final drive is transmitted via the 2nd reduction in-board Planetary Assemblies. The Axle Shafts are fully floating (i.e. not subjected to wheel loads) with each Wheel Hub supported on opposed taper Roller Bearings.

Specification

Overall Ratio
12.33:1

Input Flange
To suit Hardy Spicer 1310 Coupling

Wheel Fixing
8 studs: 9/16” x 18 UNF-3A on 165.1mm (6.5”) PCD

Dynamic Axle Load Rating
Maximum load rating 3,000Kg (6600 lbs) based on 1143mm (45”) wheel track

Service Brake
See Torque/Pressure Graph

Park Brake
Optional (disc mounted). See Torque / Lever Force Graph

Approximate weight
250kg (550lb) dry

Oil Capacity
9 **litres (1.98 US Gallons)**

Installation Drawing

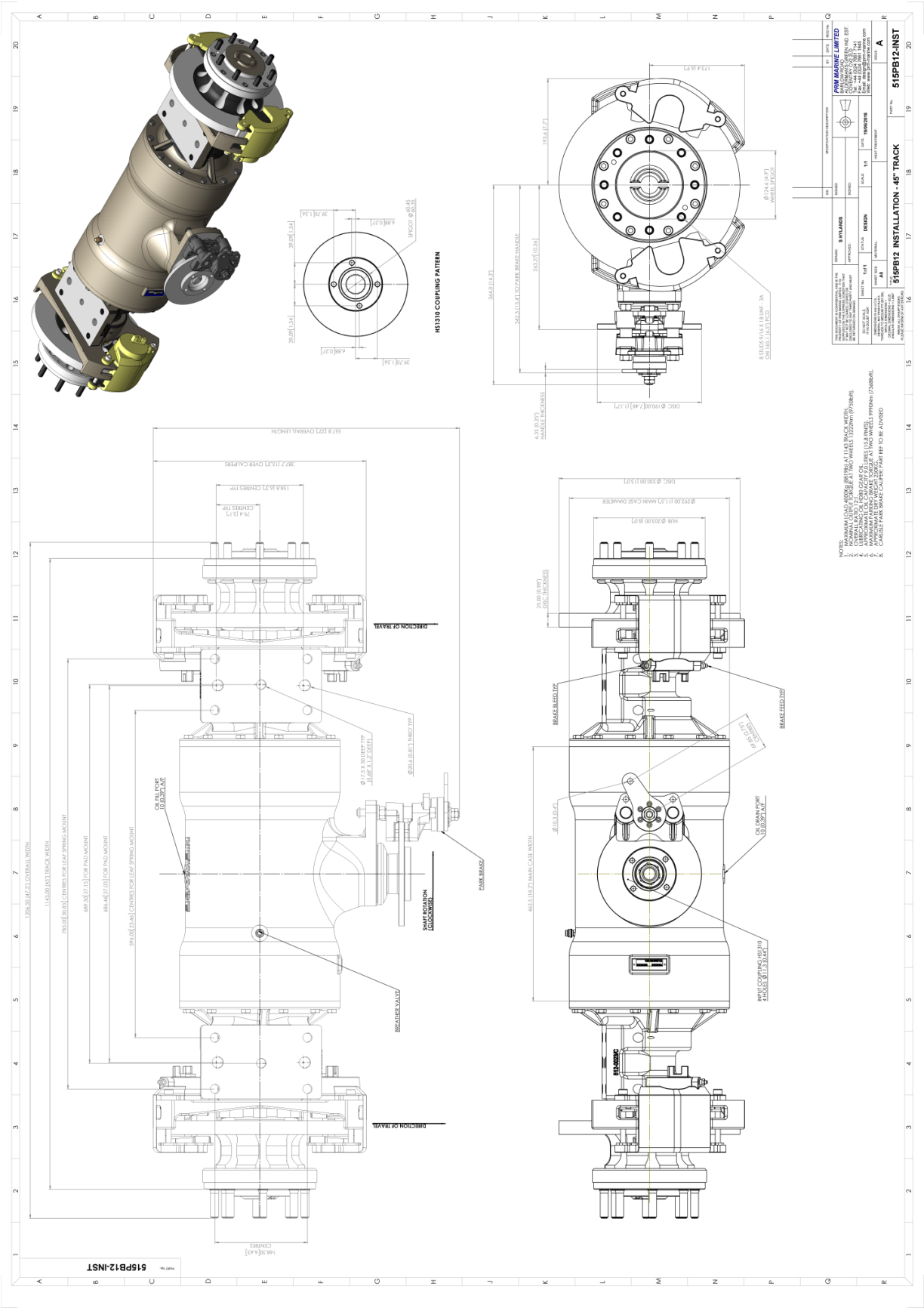

IDENTIFICATION

If spares are required, please quote the axle model, the vehicle/machine model and serial number from the blue plate. 515 Axles are produced in a variety of configurations for individual customer requirements; therefore it is important to identify the Axle correctly.

The part number allocated to each Axle describes the basic specification as below:

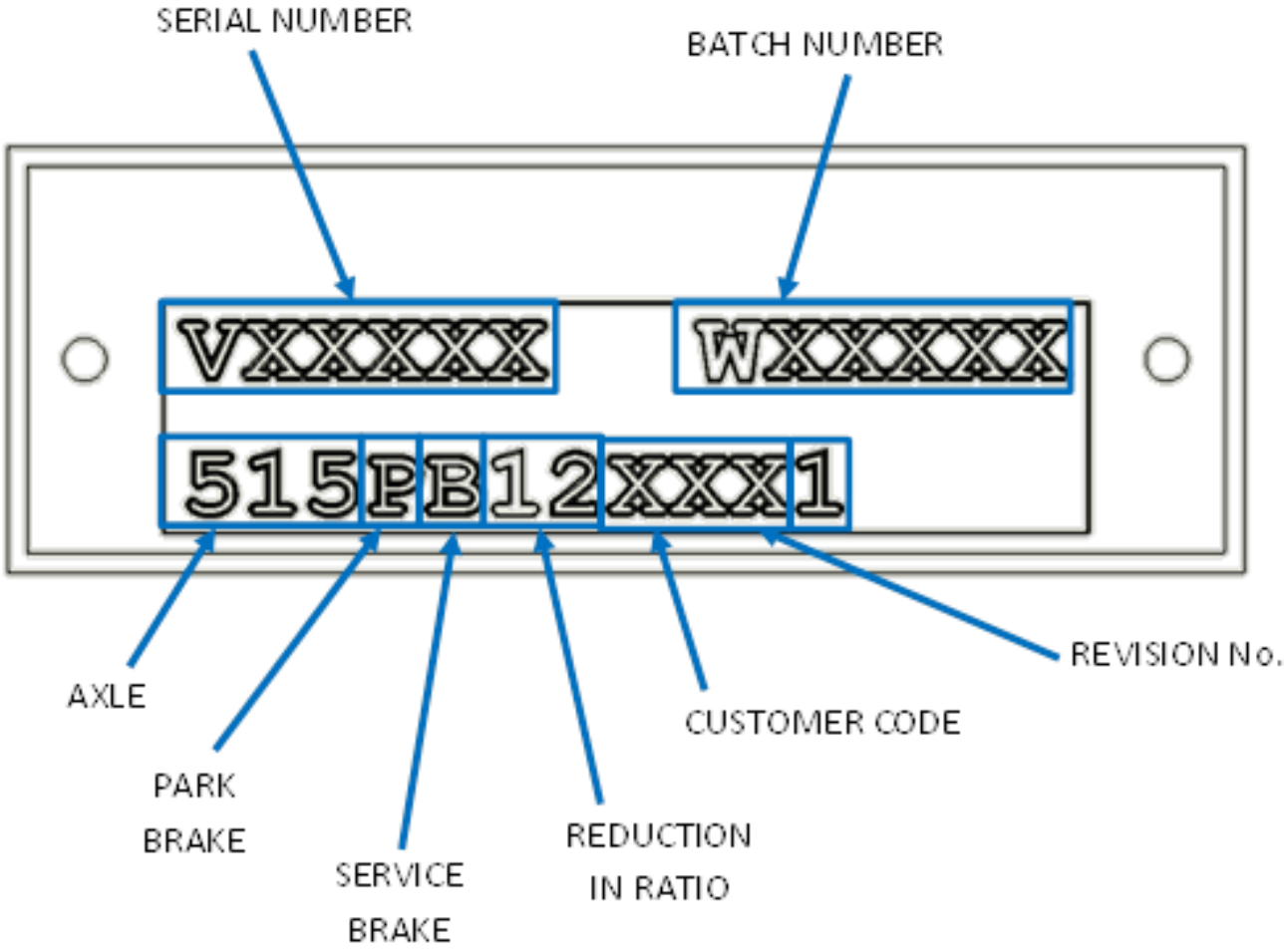

GENERAL SERVICE INFORMATION

Routine Maintenance

Check	Frequency
Axle Oil change	After initial 300 Hrs then every 1,000 Hrs
Axle Oil Level check	Monthly
Axle Shaft Bolts	Monthly
Brake Fluid change	Annually
Brake Fluid Level check	Monthly
Check Axle Arm/Main Case joint securing Bolts	Monthly
Check Wheel Hub Bearing adjustment	1,000 Hrs
Check Wheel Nut	Weekly
Visual check for oil leaks around joints and Seals	Weekly
Prop Shaft Nut	Monthly

Lubricants

Only those lubricants shown below or their direct equivalents must be used:

- SAE 80W-90 Q8 T55 Heavy Duty Gear oil for operation in ambient temperatures as low as -25°C (32-86°F) ambient.

NOTE: An alternative engineering approved Gear oil may be used. Consult 'PRM Newage' before filling the axle.

The oil is added via the combined Filler/Level Plug positioned on the rear of the axle Main Case.

Apply P-80 oil seal lubricant to clean wheel hub stub axle when installing a new unitized hub Seal.

Greases

Smear grease between Oil Seal lips and 'O' Rings at major overhauls, or whenever a repair to these areas is performed.

Only those greases shown below, their direct equivalents or alternative engineering approved grease must be used:

- Texaco Multifak EP2

Brake Fluid

The Axle Brakes operate with the fluid specification:

- FMVSS 116 DOT 4, SAEJ1703 and ISO4925 Brake Fluid

NOTE: An ISO VG32 Mineral Hydraulic Fluid Should NOT be used under any circumstance.

Liquid Sealant

The Main Case/Axle Arm joint faces must be sealed with either of the following:

- Threebond 1207D Silicone Liquid Gasket

NOTE: An alternative engineering approved silicon sealant may be used.

For locking features, the following compound must be used:

- Loctite 243
-

NOTE: An alternative engineering approved locking compound may be used.

Fastener Tightening Torques

Fastener	A/F (mm)	Torque (N.m)	Torque (lbf.ft)
	Across Flats	Newton Me-tres	Pounds Force Feet
Main Case Assembly			
Axle Arm/Main Case High Tensile Bolts (M12)	19	146	107
Axle Shaft/Wheel Hub Cap Bolt (M10)	8	80	59
Brake Caliper mounting Grade S Cap Bolt (7/16" UNF)	5/16"	47	35
Caliper Carrier Cap Bolts (M16)	14	230	170
Differential Adjuster Cap Bolts (M6)	5	21	15
Differential assembly Nut (M10)	17	77	57
Differential Bearing Adjuster Nut – *(Special Tool required)*	---	20	15
Differential Bearing Housing Bolt (M8)	13	30	22
Drain and Level Plug (1/2" BSP)	10	16	12
Hub Assembly Lock Nut (M70) – *(Special Tool required for KM14 Nut see TOOLING) Speed Brace & Back off 1 Tab – see page 23*	---	135	100
Wheel Nuts (9/16" x 18 UNF)	7/8"	230	170
Park Brake Caliper Mounting Grade S Nut (1/2" UNF)	19 (3/4")	115	85
Park Brake Disc Drag Torque after collapsing Spacer	30	1.92/2.48	17/22 Lbin

Axle Backlash

Assembly	Pinion/Wheel	Drive Flange	P.C.D	Backlash
618-9820	618-2000 618-2010	515-2181 (HS 1310)	79.40mm (3.125")	0.22-0.30mm (0.009-0.012")

Tooling

The following tooling is used to aid in the servicing of the axle. These are available from the Original Equipment Manufacturer.

PR40119 Socket Spanner for Wheel Hub Bearing Lock Nut 007-0260 - Alternative to PR40119 is **TMFS14** available from SKF stockists (M70 Stub Axle Locknut socket 19mm (3/4") drive)
PR40004 Press Pin for Wheel Studs
PR40005 Support Plate for use with Press Pins

PART No: PR40119

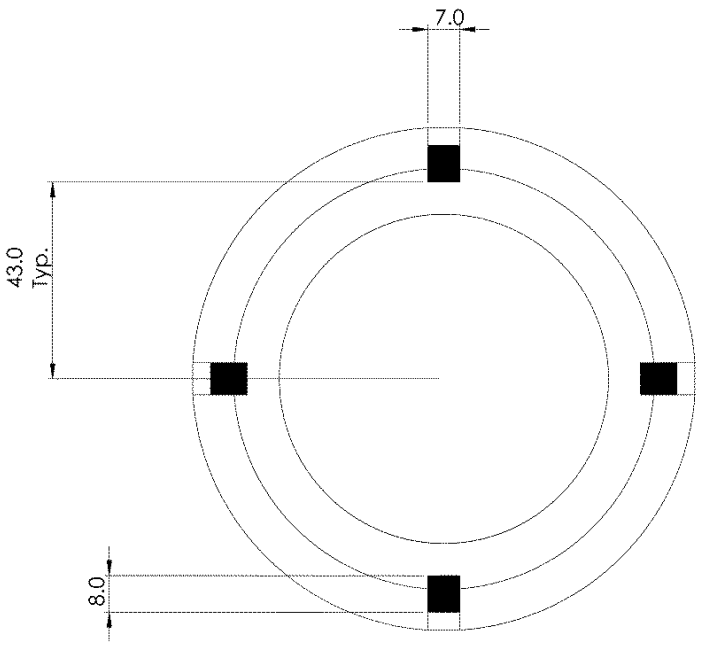

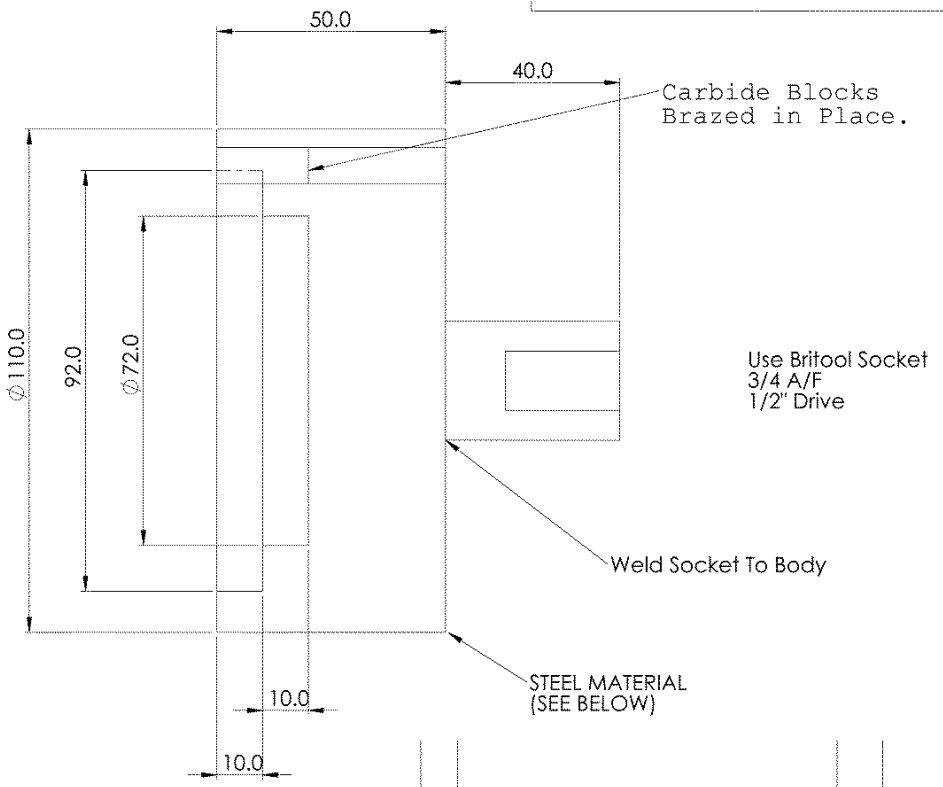

4 Off Carbide Blocks
7.0 x 8.0 x 20.0 long.

ISS	MODIFICATION DESCRIPTION	BY	DATE	MOD No

DIMENSIONS IN mm U.O.S.,
GENERAL M/C FINISH Ra 6.3,
THREADS TO MEDIUM FIT (6H G6),
WHOLE DIMENSIONS = ±1mm
DECIMAL DIMENSIONS = ±0.25
ANGULAR DIMENSIONS = ±0.50°

BREAK ALL SHARP EDGES 0.5 x 45°

PLEASE INFORM OF ANY ERRORS

THIS DOCUMENT IS CONFIDENTIAL AND IS THE PROPERTY OF NEWAGE TRANSMISSIONS LTD. IT IS SUPPLIED ON THE EXPRESS CONDITION THAT IT MAY NOT BE LOANED, COPIED OR DISCLOSED TO ANY THIRD PARTY AND MUST BE RETURNED ON DEMAND.

DO NOT SCALE,
IF IN DOUBT ASK!

DRAWN: W.B.	SIGNED W.B.		
APPROVED: W.B.	SIGNED: W.B.		
SHEET No: 1 of 1	STATUS	SCALE: 1:1	DATE: 30/10/2012

PRM MARINE LIMITED
BARLOW ROAD
COVENTRY
CV2 2LD
Tel: +44 (0)24 7661 7141
Fax: +44 (0)24 7661 1845
Email: design@prm-marine.com
Web: www.prm-marine.com

SHEET SIZE:	MATERIAL:	HEAT TREATMENT:	ISSUE:
A3	STEEL 080M40 (EN8) TO BS970		1

TITLE: WHEEL HUB LOCKNUT SOCKET FOR USE ON 007-0260 (D1)

PART No: PR40119

PART No: **PR40004**

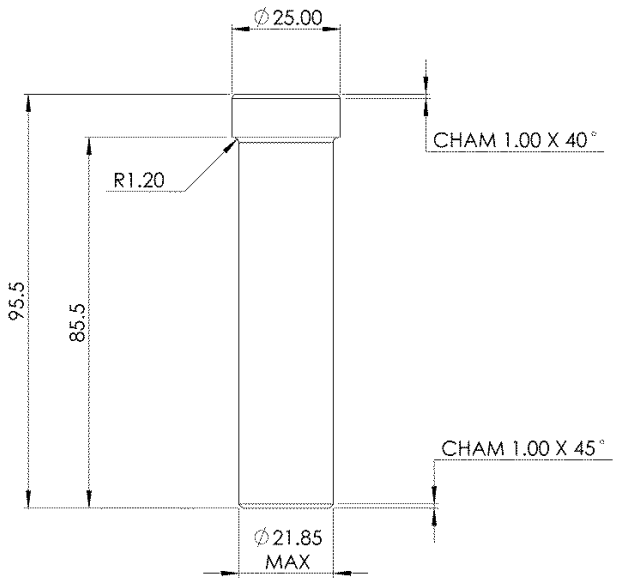

NOTE:
8 OFF REQUIRED FOR 512-0450 FITMENT TOOL.

ISS	MODIFICATION DESCRIPTION	BY	DATE	MOD No
1	PRODUCTION RELEASE	SH	130516	
B	MATERIAL EN36C WAS EN34	MC	140711	

DIMENSIONS IN mm U.O.S.,
GENERAL M/C FINISH Ra 6.3,
THREADS TO MEDIUM FIT (6H G6),
WHOLE DIMENSIONS = ±1mm
DECIMAL DIMENSIONS = ±0.25
ANGULAR DIMENSIONS = ±0.50°

BREAK ALL SHARP EDGES 0.5 x 45°

PLEASE INFORM OF ANY ERRORS

THIS DOCUMENT IS CONFIDENTIAL AND IS THE PROPERTY OF PRM MARINE LIMITED. IT IS SUPPLIED ON THE EXPRESS CONDITION THAT IT MAY NOT BE LOANED, COPIED OR DISCLOSED TO ANY THIRD PARTY AND MUST BE RETURNED ON DEMAND.

DO NOT SCALE
IF IN DOUBT ASK!

DRAWN: **M. CRANE** SIGNED

APPROVED: SIGNED:

SHEET No: **1 of 1** STATUS **PRODUCTION** SCALE: **1:1** DATE: **28/03/2011**

PRM MARINE LIMITED
BARLOW ROAD
COVENTRY
CV2 2LD
Tel: +44 (0)24 7661 7141
Fax: +44 (0)24 7661 1845
Email: design@prm-marine.com
Web: www.prm-marine.com

SHEET SIZE: **A3** MATERIAL: **STEEL EN36C TO BS970** HEAT TREATMENT: **CASE HARDEN TO 0.5/0.7 TO Rc 58/62** ISSUE: **1**

TITLE: **PRESS PIN FOR 512 AXLE STUD/HUB**

PART No: **PR40004**

PART No: **PR40005**

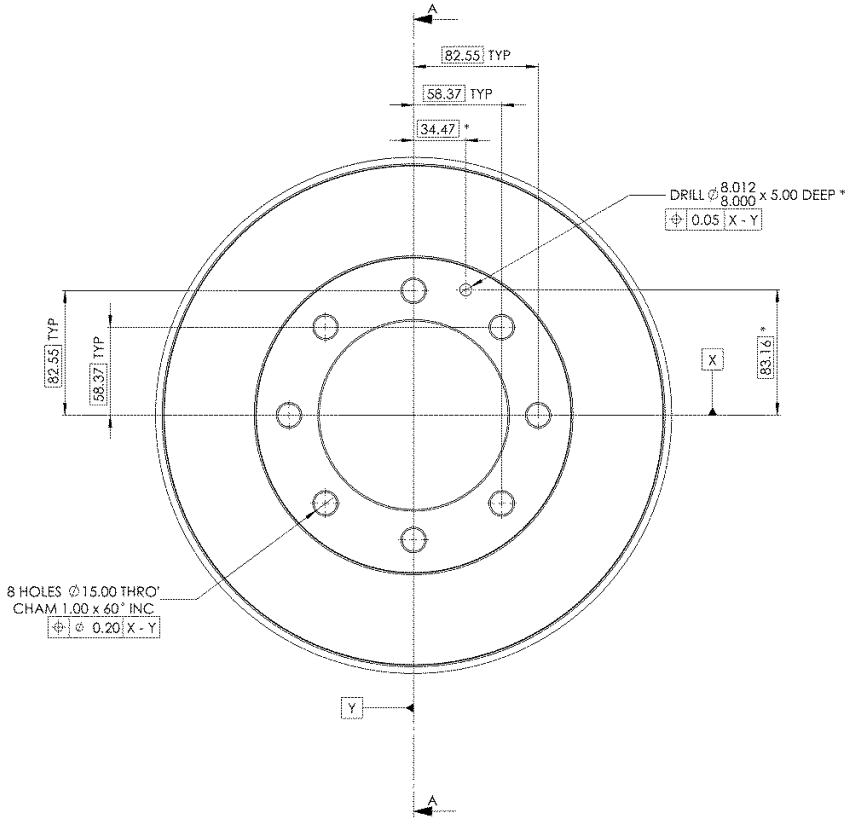

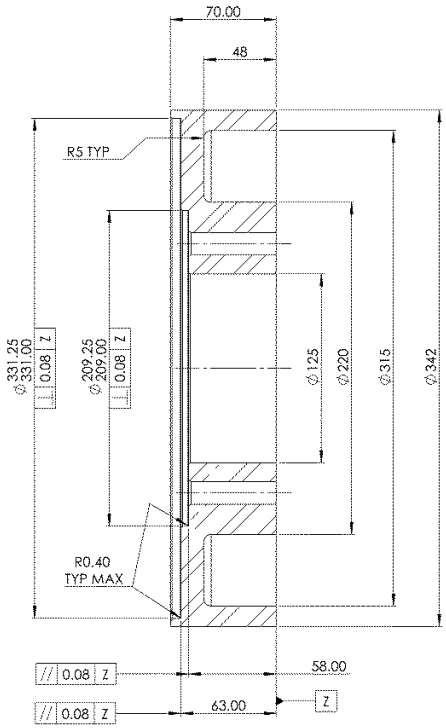

ISS	MODIFICATION DESCRIPTION	BY	DATE	MOD No
1	PRODUCTION RELEASE	SH	130516	
C	ADD ON 10MM TO BOTTOM FACE TO SUIT LONGER WHEEL BOLTS.	SH	220416	
B	REDESIGNED AS PREVIOUS CAUSED FITMENT ISSUES. SPIGOT DIAMETERS ADDED FOR 512-0040 HUB DIM	DM	130514	

DIMENSIONS IN mm U.O.S., GENERAL M/C FINISH Ra 6.3. THREADS TO MEDIUM FIT (6H 6g), WHOLE DIMENSIONS = ±1mm DECIMAL DIMENSIONS = ±0.25 ANGULAR DIMENSIONS = ±0.50°

BREAK ALL SHARP EDGES 0.5 x 45°

PLEASE INFORM OF ANY ERRORS

THIS DOCUMENT IS CONFIDENTIAL AND IS THE PROPERTY OF PRM NEWAGE LIMITED. IT IS SUPPLIED ON THE EXPRESS CONDITION THAT IT MAY NOT BE LOANED, COPIED OR DISCLOSED TO ANY THIRD PARTY AND MUST BE RETURNED ON DEMAND.

DRAWN: M.CRANE — SIGNED:

APPROVED: — SIGNED:

DO NOT SCALE. IF IN DOUBT ASK!

SHEET No: 1 of 1 | STATUS: PRODUCTION | SCALE: 1:2 | DATE: 28/03/2011

PRM MARINE LIMITED
BARLOW ROAD
COVENTRY
CV2 2LD
Tel: +44 (0)24 7661 7141
Fax: +44 (0)24 7661 1845
Email: design@prm-marine.com
Web: www.prm-marine.com

SHEET SIZE: A2 | MATERIAL: STEEL 070M20 OR EN3A TO BS970 | HEAT TREATMENT: | ISSUE: 1

TITLE: **STUD PRESS BASE PLATE FOR 512-0040 HUB**

PART No: **PR40005**

SERVICING AND REPAIRS

WARNING: Before carrying out any service work always ensure that the engine is switched off

Before removal of the Axle for repair or overhaul, carefully study the following procedures. Use proper hand tools, slings and hoists for the job. WORK SAFELY

Keep all work areas, tools and Axle clean. All oil should be drained into a suitable container. Wipe up any spilled oil or fluids to prevent accidents. Wear correct safety equipment I.e. safety glasses and safety shoes to guard against personal injury

IMPORTANT NOTICE: ONLY REMOVE BREATHER, OIL DRAIN PLUG OR OIL LEVEL PLUG ONCE THE AXLE IS AT AMBIENT TEMPERATURE. REMEMBER HOT OIL CAN CAUSE BURNS – WORK SAFELY.

CAUTION: The above operations should be carried out by suitably qualified personnel and strictly in accordance with the procedures detailed in the workshop manual.

Drawings showing all internal components are contained in the parts lists at the back of this manual.

Seals

Remove Oil Seals carefully to prevent damage if they are to be re-used, however to prolong the life of the axle, it is best to replace these items.

Bearings

If removing taper roller Bearings for re-use keep them in matched sets and protect all Bearings from contamination.

Cleaning

WARNING: If using cleaning solvents these can be toxic, flammable, a skin irritant or give off harmful fumes. Avoid prolonged contact, vapour inhalation, or smoking. Failure to take care can result in injury or death.

Rinse all metal parts in solvent to remove dirt, grease and oil.

Be careful to remove solvent from items before re-fitting.

INSPECTION

Main Case and Arms

Inspect for cracks. Check sealing surfaces for any imperfections, damage, etc. which will lead to oil leaks. Check all threads for damage.

Gears

Inspect for any chipped, broken or cracked gear teeth, also for any excessive wear i.e. initial or progressive gear pitting.

Bearings

Inspect for any damage, denting, initial or progressive pitting and over-heating. Each time a Bearing is removed for inspection, or replacement it will be necessary to recalculate the required shim thickness to pre-load the Bearings correctly, see Procedures for more information.

Threaded Parts

Inspect for stripped or damaged threads.

PROCEDURES

CAUTION: When re-assembling the Axle all threaded fasteners must be tightened to the specified torques to prevent premature failure. Refer to Fastner Tightening Torque on page 9.

Some servicing operations can be carried out with the Axle still mounted to the vehicle (provided, of course, that there is sufficient space); an example of this is the replacement or repair of the brake assemblies. The repair or replacing the Differential, Planetaries or Arm assemblies however will require the complete removal of the Axle from the vehicle.

If the details outlined below are carefully followed no difficulty will be found in stripping and rebuilding the Axle. It is most important that all components are perfectly clean and in good condition before reassembly.

CAUTION: All gears are supported by taper roller Bearings. Each time a bearing has been removed for inspection, component repair or replacement it will be necessary to recalculate the number of Shims or adjust the Wheel and Differential Bearing to give the required pre-load. Re-Shimming of the Axle is detailed under the Axle Shimming procedure.

Section 'A' – 512 Axle Assembly – Axle Shown with Pads Upwards

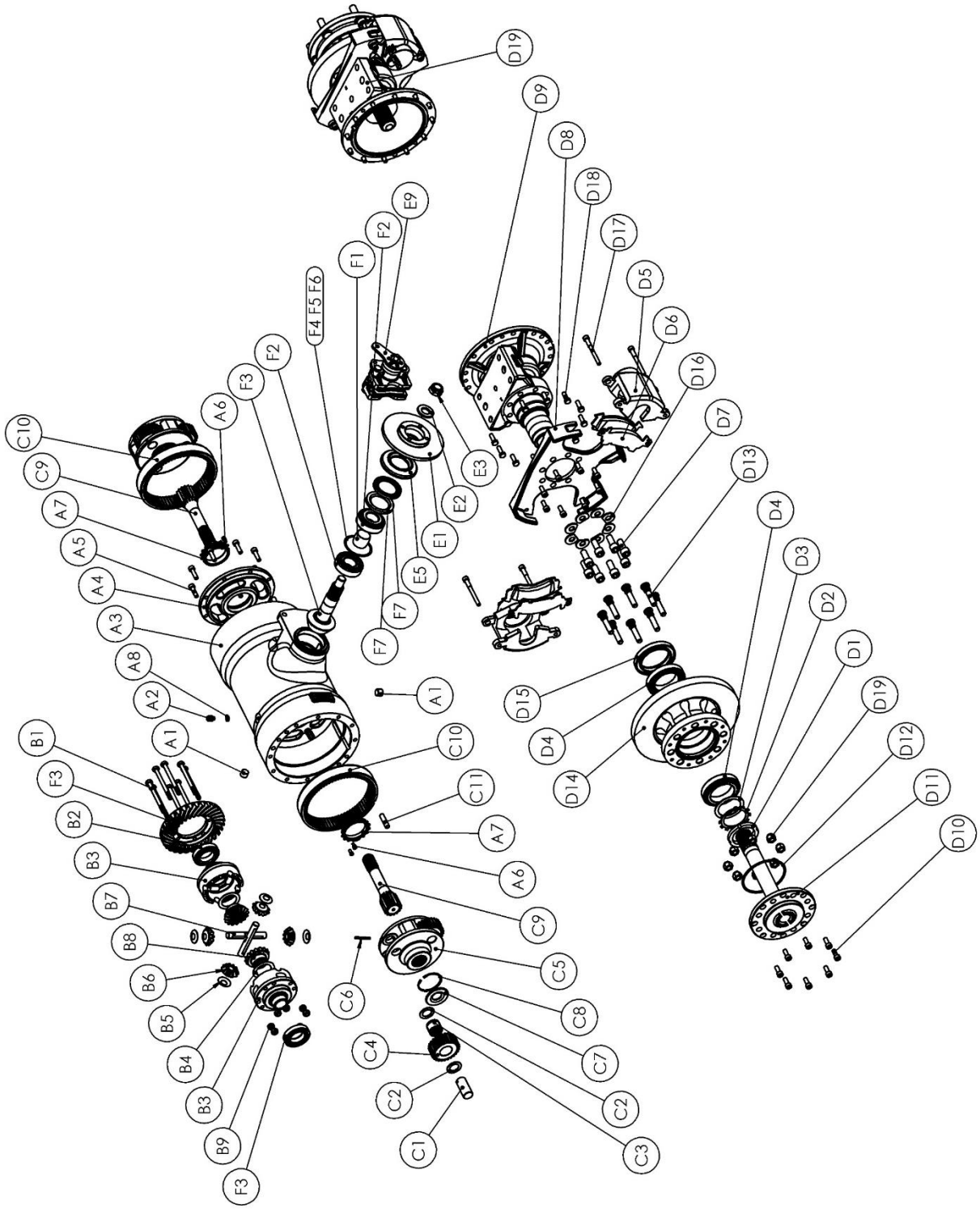

Track Width Option Component Table

Track Width	Maincase (A3)	L/H Arm (D9)	R/H Arm (D20)	Axle Shaft (D11)
41” (1041mm) Pads Underneath	515-0011	516-0023	516-0022	512-0102
45” (1143mm) Pads Underneath	515-0010	516-0023	516-0022	512-0102
52” (1321mm) Pads Underneath	515-0011	516-0025	516-0024	512-0103
56” (1422mm) Pads Underneath	515-0010	516-0025	516-0024	512-0103
41” (1041mm) Pads On Top	515-0011	516-0023	516-0022	512-0102
45” (1143mm) Pads On Top	515-0010	516-0023	516-0022	512-0102
52” (1321mm) Pads On Top	515-0011	516-0025	516-0024	512-0103
56” (1422mm) Pads On Top	515-0010	516-0025	516-0024	512-0103

Pinion Shimming Procedure

NOTE: The below procedures assume the Axle is stripped down following the above Service Procedures, and details the reassembly and shimming of the Input Pinion (F3) into the Main Case.

If the Crown Wheel and Pinion (F3) or Pinion Head Bearing (F2) are replaced, the following procedure needs to be carried out for correct contact of the Bevel Gear set:

1. Note the new Bevel Pinion (F3) mounting distance (etched as MD) on the bottom of the head. (Approximately 102.00mm)
2. Measure the new overall width of Pinion Head Bearing (F2). (Approximately 29.37mm)
3. Note the Case Constant, which is 132.27mm .
4. The required Shim thickness can then be calculated by using the following calculation:
   = Case Constant – (Mounting Distance + Bearing Width)
   = 132.27mm - (1. + 2.)

   e.g. For theoretical normal shims:
   = Case Constant – (Mounting Distance + Bearing Width)
   = 132.27mm – (102.00mm + 29.37mm)
   = 0.90mm required

CAUTION: If any components are replaced a new Collapsible Spacer (A7) must be used and the Crown Wheel/Pinion marking and backlash reset.

Section 'B' – Main Case and Differential Assembly

Item	Part No	Qty	Description
A1	0150250	2	½" BSP Level / Drain Plug
A2	CP1498S/A	1	Breather
A3	See Track Width Component Table (Page 17)	1	Main Case
A4	515-0730	1	Bearing Housing
A5	0081530	8	Cap Head M10 X 30
A6	0081312P	4	M6 x 12mm Cap Bolt
A7	512-2151	2	Bearing Adjuster Nut
A8	Part of A2 - CP1498S/A	n/a	Sealing Washer
B1	0041024HT	8	M10 x 120mm Bolt
B2	055C028U049H	2	Taper Roller Bearing
B3	615-9521	1	Differential Case
B4	400-2110	2	Diff Wheel Thrust Washer
B5	400-2120	4	Diff Pinion Thrust Washer
B6	410-2100	4	Diff Pinion
B7	413-2130	2	Diff Spider
B8	410-2090	2	Diff Wheel
B9	0051006HT	8	M10 Nut
F3	618-9820	1	Crown Wheel & Pinion

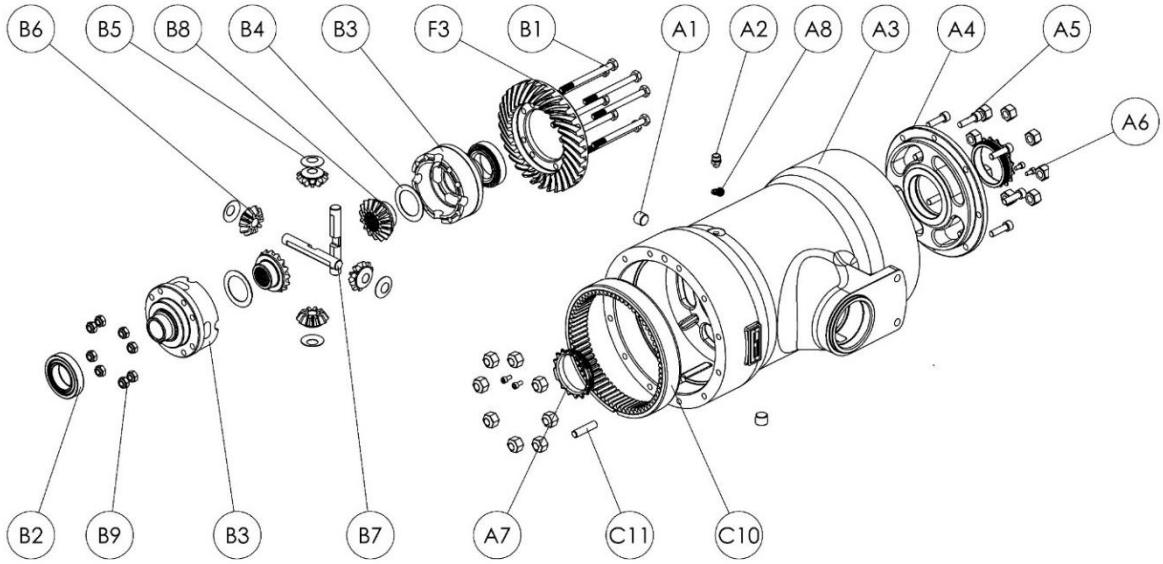

Servicing the Main Case and Differential Assemblies

Removing the Differential

1. Remove the Axle Arm Assemblies – see Section D.
2. Remove the Axle Arm Planetary Assemblies and Sun Gear - see Section C.
3. Remove Bolts (A6) and 8off Bolts (A5).
4. Unscrew and remove Adjuster Nuts (A7) and Bearing Housing (A4) using extractor screw holes. The Differential is now free and can be retracted.

CAUTION: Great care must be taken when removing the Differential Assembly from Main Case. Any damage to the Crown Wheel would be detrimental to the axles' performance.

WARNING: The space constraints around the differential are very tight. The Differential Assembly weights 20Kg, so ensure that you have a good grip on the casing before attempting to remove the assembly from the case.

Servicing the Differential Assembly

1. Remove Nuts (B9) and Bolts if necessary (B1). The Crown Wheel (F3) is now loose and the Differential assembly will split into 2 halves.
2. Remove the Differential Spider 2off (B7) with the respective Differential Wheels (B8), Pinions (B6), Wheel Washers (B4) & Pinion Washers (B5).
3. Inspect all Differential Wheels (B8), Pinions (B6), Spiders (B7), Bearings (B2), Wheel Washers (B4) and Pinion Washers (B5) for damage and wear, replace if necessary.
4. To assemble, reverse the above procedure.
5. If new Differential Bearings (B2) are fitted, it will be necessary to reset the Bearing pre-load and Crown Wheel/Pinion backlash.

NOTE: To reset the backlash, see page Error! Bookmark not defined. **for the procedure. The acceptable range can be found on page 9.**

Section 'C' – Planet Carrier Assembly

Item	Part No	Qty	Description
C1	400-0250	3	Planet Pin
C2	400-0270	6	Thrust Washer
C3	0562005	3	Needle Roller Bearing
C4	420-0080	3	Planet Gear
C5	512-0060	1	Planet Carrier
C6	010-0030	3	Spring Pin
C7	400-1320	1	Spacer
C8	003-0120	1	Circlip
C9	515-0091	1	Long Arm Sun Gear
C10	420-0070	1	Annulus
C11	0211250	1	Dowel

NOTE: Quantities stated per side (2 Assemblies per Axle)

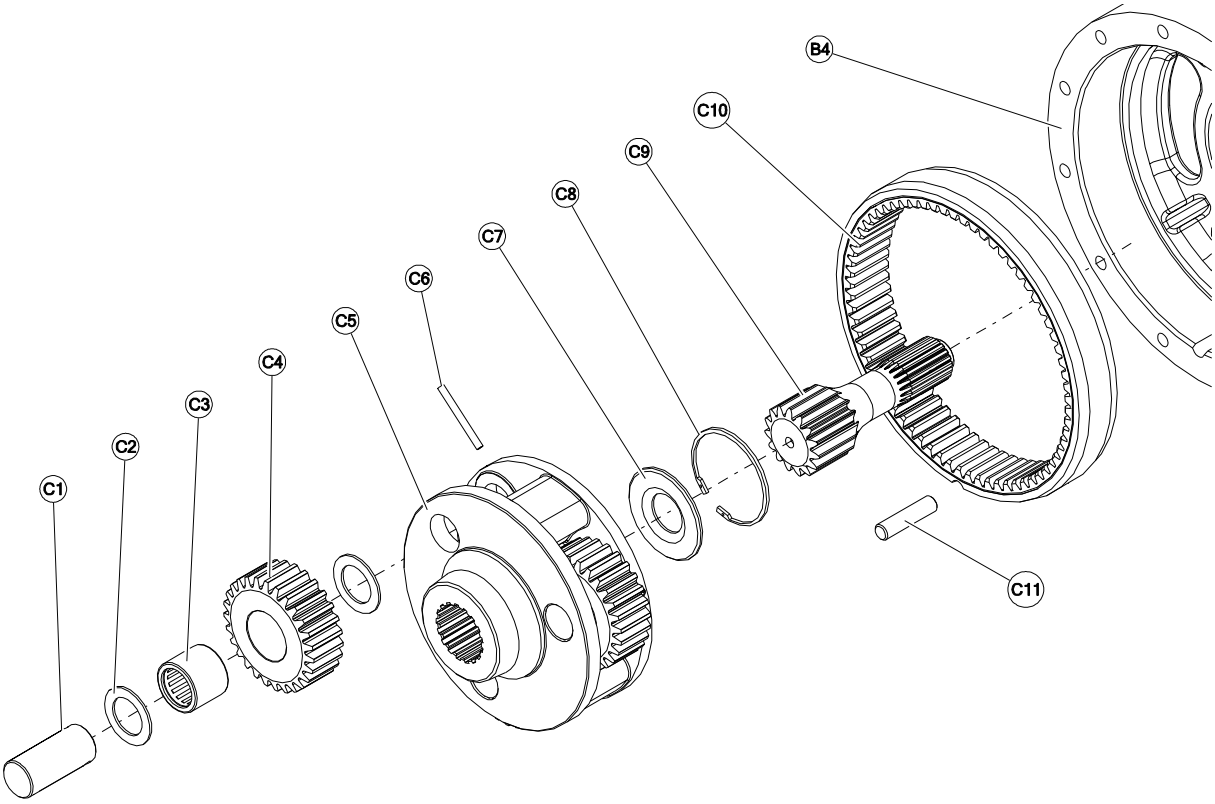

Servicing the Planet Carrier Assemblies

NOTE: This procedure assumes the Axle has had both arms removed - see section D.

1. The Planet Carrier assembly can now be removed from the Centre Casing. Take care not to withdraw the floating Sun Gear (C9).
2. Check the Planet Gears (C4) and the mating gear teeth on the Annulus (C10) and Sun Gear (C9) for damage and wear. The Planet Gears (C4) should run free in the Planet Pins (C1), without excessive radial "play". Replace if worn.

NOTE: When servicing the Planet assembly, we recommend all three Planet Gears (C4), Planet Pins (C1), Needle Roller Bearings (C3), Spring Dowels (C6), Annulus (C10) & Sun Gear (C9) are replaced together.

Dowels are replaced together.

3. To replace the Planet Gears, Pins or Bearings, drift each Spring Dowel (C6) through its hole, which locates the Planet Pins (C1) through the Planet Carrier (C5). Once the Dowels have been removed, lightly drift each Planet Pin (C1) through the Planet Gear (C4) and Planet Carrier (C5). Remove the loose Planet Gears (C4), Thrust Washers (C2) and Needle Roller Bearings (C3). Remove Circlip (C8), which secures the Spacer (C7).

NOTE: The Spacer (C7) is fitted with the large central chamfer facing outwards towards the Spline in the Planet Carrier (C5).

To reassemble:

1. Replace the Spacer & Circlip (C7 & C8) and slide the Needle Roller Bearings (C3) into the Planet Gears (C4). Fit the bottom Thrust Washer (C2) over the machined boss within the Planet Carrier (C5), place the Planet Gear (C4) with the Needle Roller Bearing (C3) on top of the bottom Thrust Washer and from the underside gently tap the Planet Pin (C1) through the Carrier (C5), bottom Thrust Washer (C2) & Planet Gear (C4).

NOTE: When you begin this procedure, the cross hole in the Planet Pin (C1) must be aligned with the cross hole in the Planet Carrier (C5).

2. When part way through fit the top Thrust Washer (C2) and continue to drift the Planet Pin (C1) all the way through the Planet Carrier until it is flush with the Planet Carrier machined face (C5).
3. Secure by fitting a new Spring Dowel (C1) in the Planet Carrier (C5). To prevent the Spring Dowel (C1) from drifting out of position. The end should be peined into the Planet Carrier (C5). Failure to do this can cause the Planet Gear (C4) to work loose.
4. Check for free rotation of the Planet Gears (C4) & their respective Planet Pin (C1).
5. This process is repeated for all three Planet Gear fitment (C4).
6. To refit, engage the Teeth of the Sun Gear (C9) with those of the Planet Gears (C4). Mesh the Planet Gears with the Annulus (C10) and push into position.

Removing the Annulus Gear

1. To remove Annulus (C10), use a special purpose extractor tool or pinch bars, located behind the Annulus (C10) diametrically opposed, in a scissor fashion to prise the Annulus clear of the Maincase bore (A3).
2. To refit, reverse procedure ensuring that the Dowel (C11) is aligned with the slot at the bottom of the Annulus (C10).

Section 'D' – Axle Arm, Hub and Brake Assemblies

Item	Part No	Qty	Description
D1	007-0260	1	M70 Lock Nut
D2	009-0230	1	Locking Washer
D3	435-1440	1	Thrust Washer
D4	0540751H	2	Taper Roller Bearing
D5	512-2500	2	Brake Caliper (includes D6 & D17)
D6	512-2510	4	Brake Pad
	Order 512-2510-KIT (8 Brake Pads) and replace all pads on the axle at the same time		
D7	0081740P	8	M16 x 40mm Cap Bolt
D8	512-2400	1	Caliper Carrier
D9	See Track Width Component Table (Page 17)	1	Axle Arm LH
D10	0081525P	8	M10 x 25mm Cap Bolt
D11	See Track Width Component Table (Page 17)	1	Axle Shaft
D12	0431303V	1	Viton "O" Ring
D13	512-0450 512-0452 (ALL AXLES SERIAL No. V018402 BUILD No. W15455 ONWARDS)	8	9/16 UNF x 18 Wheel Stud
D14	512-0040 515-0040 (ALL AXLES SERIAL No. V018402 BUILD No. W15455 ONWARDS)	1	Wheel Hub / Brake Disc
D15	417-2850 613-2850 (ALL AXLES SERIAL No. V018402 BUILD No. W15455 ONWARDS)	1	Hub Seal
D16	512-2192	8	Caliper Carrier Washer
D17	SEE D5	4	Caliper Mounting Bolt
D18	0041210HTP	12	M12 x 35mm Bolt
D19	007-0400	8	9/16" UNF x 18- 3A Wheel Nut
D20	See Track Width Component Table (Page 17)	1	Axle Arm RH

NOTE: Quantities stated per side (2 Assemblies per Axle)

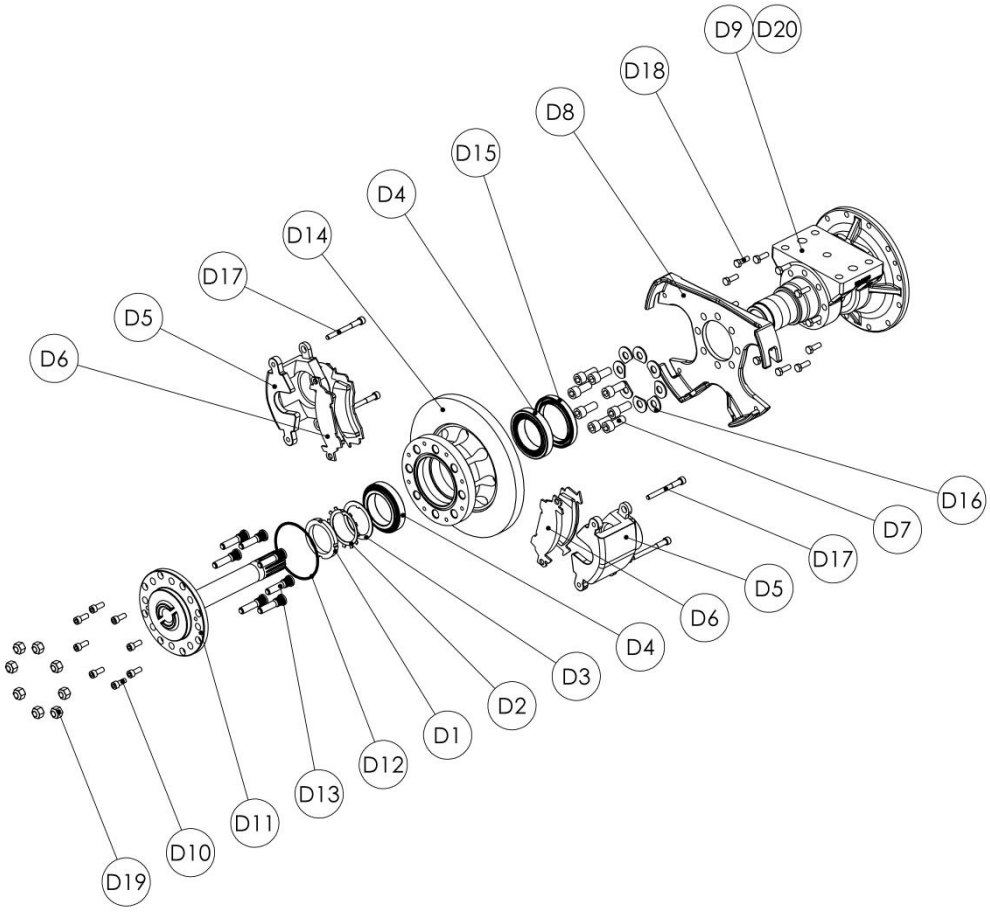

Servicing the Axle Arm, Hub and Brake Assemblies

The Hub assembly can be serviced with the Axle Arm still connected to the Main Case. Procedure is as follows:

1. Remove 8off Bolts (D10) that secures the Axle Shaft (D11) to the Wheel Hub/Brake Disc. Withdraw the Axle Shaft (D11) using the extractor screws, and inspect the Spline form for damage and wear.
2. Straighten locking tab ears on Lockwasher (D2), unscrew & remove the Lock Nut (D1) using a special tool. A gentle tap with a soft mallet on opposing sides of the Brake Disc will assist on pulling the assembly off the axle arm stub. Remove Lockwasher (D2) (note the keyway lines) and Bearing Spacer (D3).
3. The Wheel Hub (D14) can now be withdrawn from the Axle Arm stub.

NOTE: Care must be taken not to drop the loose Bearing Cones.

4. Examine all Bearing Cups & Cones for wear or damage, replace as necessary.

NOTE: We recommend the Hub Oil Seals are always changed when the Hub has been removed.

5. The Bearing Cup (D4) can be drifted out of the Hub (D14) if they need replacing. When fitting new Bearing cups (D4) ensure that they are aligned squarely to the bores before pressing in.

NOTE: If the Rear Bearing (D4) is replaced Oil Seal (D15) will also need replacing.

6. To reassemble the Hub assembly, reverse the above procedure using a new Lockwasher (D2).

7. To adjust the Hub Bearings:
    i. Tighten the Lock Nut (D1) to the tightening torque of 135 Nm (100 lb.ft). When checking the torque setting, rotate the Wheel Hub 3 turns in each direction to ensure the Bearings have "seated" correctly and recheck tightening torque. Repeat this procedure 3 times.
    ii. Slacken the Lock Nut (D1) back a distance equal to 1 tab of the new Lock Washer (D4).
    iii. Bend ear of Lock Washer over to secure the Nut.

NOTE: Never re-use a Lock Washer (D4).

Servicing the Brake Assemblies

Each Brake Assembly consists of two sliding calipers per side, which run along the length of the Mounting Bolt (D17), and so the Caliper needs to be removed to service the Pads.

1. Remove Caliper Mounting Bolts (D17) and pull the Caliper assembly away from the Caliper Carrier (D8).
2. Remove the Brake Pads (D6) by depressing the clips within the Caliper body.
3. Inspect for Pad wear and replace where necessary.

NOTE: 512-2510-KIT consists of 2 Brake Pads, and we recommend replacing all the Brake Pads (D6) at the same time.

Section 'E' – Park Brake Assembly

NOTE: This only applies to 512PB specification axles.

Item	Part No	Qty	Description
E1	515-2181	1	Park Brake Flange
E2	400-2190	1	Flange Washer
E3	400-2200	1	Nut
E9	512-2520	1	Park Brake Calliper
E5	400-0910	1	Oil seal Cover

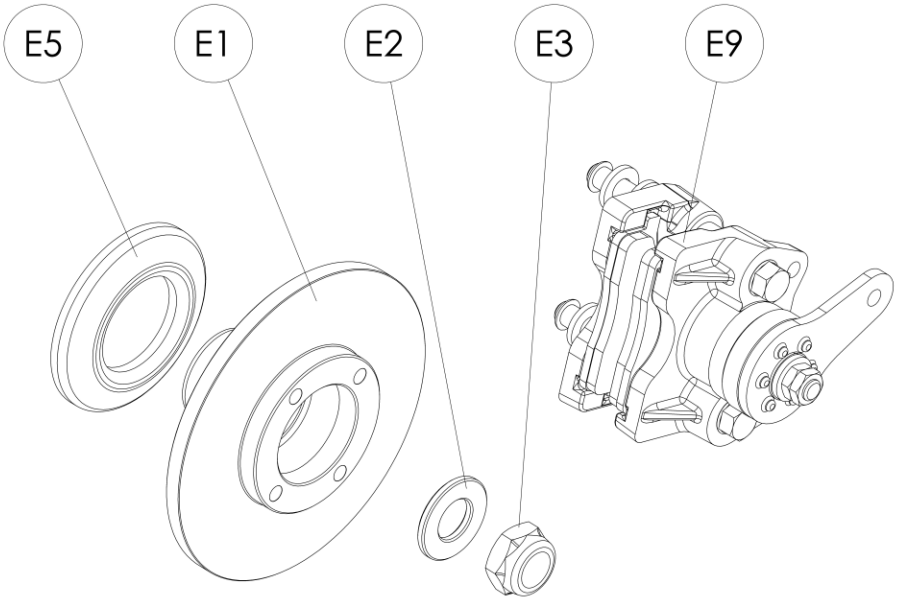

Servicing the Park Brake Assembly

1. Remove the Nuts and Washers from the Park Brake Caliper Bolts (E9) from the case (A3). The Caliper Assembly is now free to be removed radially away from the Park Brake Disc (E1).
2. To gain access to the Oil Seals (F7), remove the Nut (E3), Flange Washer (E2) and Park Brake Flange (E1) together with the Oil Seal Cover (E5). Inspect the Oil Seals (F7) for any damage that could affect its performance.
3. If the Oil Seals (F7) looks damaged, this can be pressed or drifted out of the case (A3).
4. To reassemble, follow procedure in reverse.

CAUTION: Great care must be taken when realigning the Caliper with the Park Brake Disc. The Caliper is self-positioning and so should have sufficient movement to slide along the Bolts.

Replacing the Park Brake Caliper Pads

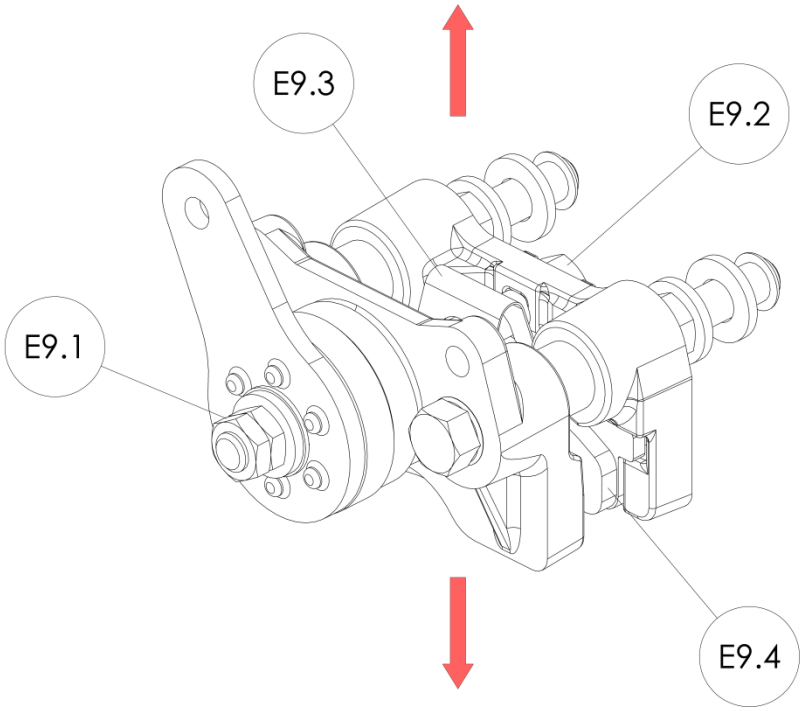

1. Loosen the Nut (E9.1) and slide the Bolt (E9.2) out through the Caliper body.
2. Remove the Spring (E9.3) once the Bolt (E9.2) has pass all the through the body.
3. The old Pads (E9.4) will slide out of the Caliper body.
4. Insert the new Pads and reposition the Spring (E9.3) so that it is reacting on the inside face of both Pads.
5. Reinsert the Bolt (E9.2) and tighten the Nut (E9.1).

Section 'F' – Park Brake Overhaul

The Park Brake assembly is a ball and ramp, sliding caliper brake designed for use as a Park Brake. The Park brake has an open calliper design to facilitate changing the linings, along with a retraction spring to reduce parasitic drag. It is sealed from the environment to provide a long and trouble-free service life.

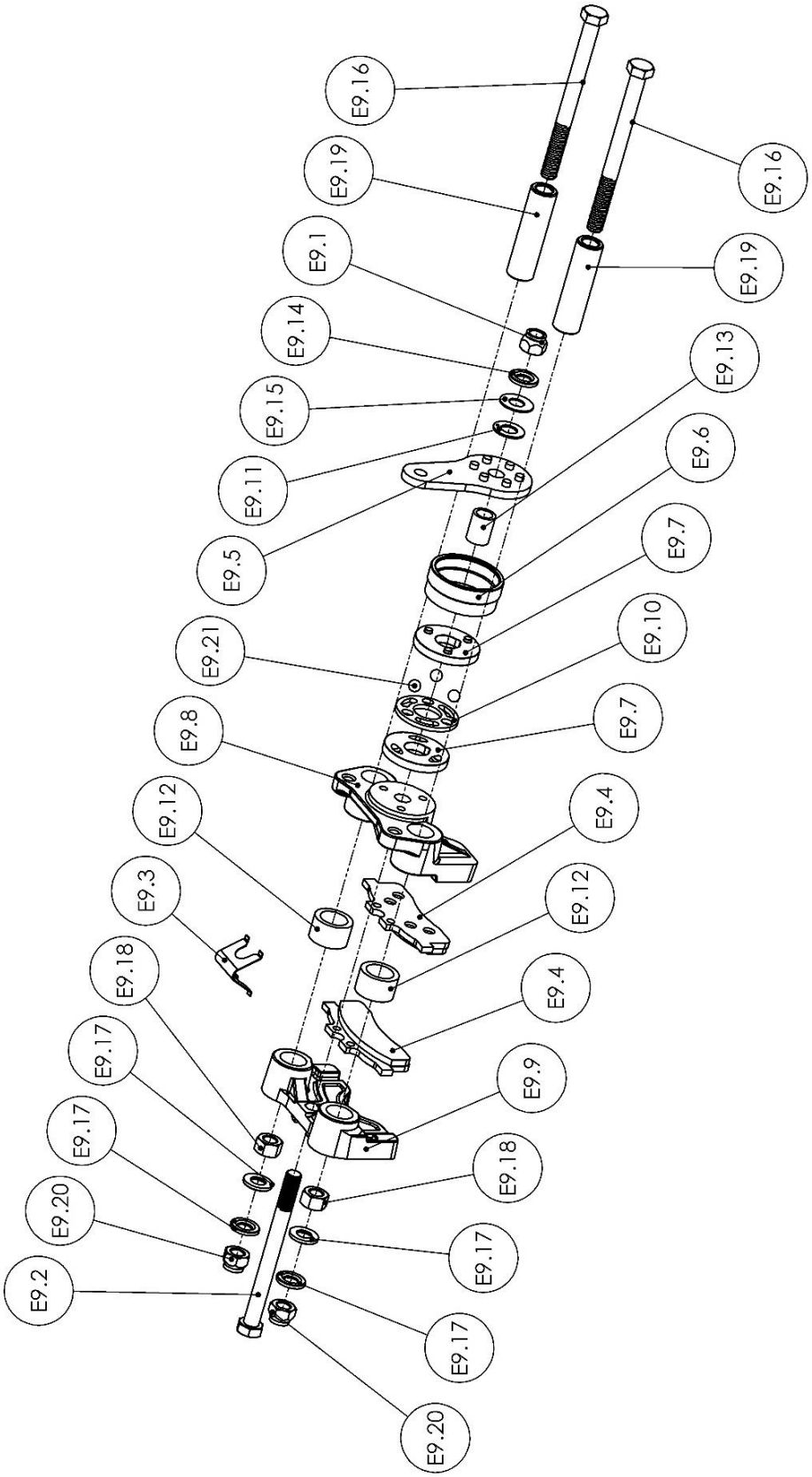

PARK BRAKE ASSEMBLY – PART No. 512-2520		
Item	Description	Qty
E9.1	NUT ½" X 20 UNF NYLOC	1
E9.2	BOLT ½" X 20 UNF X 5.25" LONG	1
E9.3	SPRING FLAT	1
E9.4 *	LINING AND CARRIER ASSEMBLY – Part No. 613-2530	2
E9.5	LEVER	1
E9.6	BOOT	1
E9.7	CAM	2
E9.8	TORQUE PLATE FRONT	1
E9.9	TORQUE PLATE REAR	1
E9.10	BALL/ RETAINER SUB ASSEMBLY	1
E9.11	GARLOCK THRUST BEARING	1
E9.12	SEAL SLEEVE	2
E9.13	ID SEAL	1
E9.14	WASHER HARDENED	1
E9.15	WASHER	1
E9.16	BOLT ½" X 13 UNC X 5.75" LONG	2
E9.17	WASHER	4
E9.18	NUT ½" X 13 UNC	2
E9.19	SPACER SLEEVE	2
E9.20	NUT ½" X 13 UNC NYLOC	2
E9.21	3/8" BALL BEARINGS	3

NOTE: THE PARTS ABOVE ARE NOT AVAILABLE INDIVIDUALLY AND ARE SHOWN FOR ILLUSTRATION PURPOSES ONLY EXCEPT FOR THE * E9.4 REPLACEMENT BRAKE LINING AND CARRIER ASSEMBLY SUPPLIED AS 613-2530-KIT.

Mounting Procedure

1. Feed the Bolts (E9.16) together with a Washer (E9.17) through the Main Case mounting lug (A3).
2. Once just through the Case feed another Washer (E9.17), Nut (E9.18) and the Assembled Caliper (E9) pre- aligned with the Park Brake Disc (E5) and continue to tighten the Nut (E9.18) to clamp to the Main Case (A3).
3. Thread onto the Bolt (E9.16) the Locking Nuts (E9.20) until a 0.040" to 0.080" (1.00 mm to 2.00 mm) gap exists between the Sleeves (E9.19) and the Locking Nuts (E9.20).

Adjustment Procedure

1. Tighten Nut (E9.1) until firm contact is made between the Disc and the Linings. Torque to 11 N.m (8lbf.ft), making sure the Lever (E9.5) is in the correct operating position for application.
2. Back off Nut (E9.1) 4 to 5 flats and check that the Disc is free to rotate.

Lining Replacement

1. Replace both linings when either has worn to 2.3mm (0.090") remaining thickness.
2. Loosen the Nut (E9.1) enough to slide each of the Torque Plates (E9.8 & E9.9) away from the Disc and far enough to provide clearance to remove the old Carrier/ Lining assemblies (E9.4) and install new ones.
3. Collapse the Lining Reaction Spring (E9.3) and remove from the brake head assembly.

4. Slide the Torque Plates (E9.8 & E9.9) away from the Disc and move the Carrier/ Lining assemblies (E9.4) out of the pockets and remove from the Brake Head Assembly from the side.
5. **NOTE: PRIOR TO THE INSTALLATION OF THE NEW LININGS IT IS RECOMMENDED THAT "ALFA 2000" GREASE (ANTI-SEIZE & LUBRICATING COMPOUND) MANUFACTURED BY CHEMTOOL BE APPLIED TO THE INTERFACE OF THE SLEEVE (E9.19) AND THE TORQUE PLATES (E9.8 & E9.9). AFTER GREASE HAS BEEN APPLIED SLIDE THE TORQUE PLATES BACK AND FORTH ON THE SLEEVE AS FAR AS POSSIBLE TO ENSURE THAT GREASE HAS BEEN INTRODUCED INTO THE BORES OF THE TORQUE PLATES**

6. Install new Carrier/ Lining assemblies (E9.4) in each of the Torque Plates (E9.8 & E9.9)

7. Install Lining Reaction Spring (E9.3) into the Brake Head Assembly, making sure that the feet on the springs locate securely into the holes in both Carrier/ Lining assemblies (E9.4)

8. Adjust Brake as per the ADJUSTMENT PROCEDURE.

SPARES KITS

To ease the procurement of spares, we offer a catalogue of Kits that group common parts together to simplify the ordering process. These Kits are detailed below:

Individual Parts (Quantity Per Axle)			
Item	**Part No**	**Qty**	**Description**
A1	0150250	2	Plug
A2	CP1498S/A	1	Breather
A3	See Track Width Component Table (Page 17)	1	Main case
A4	515-0730	1	Bearing Housing
A5	0081530	8	Cap Screw M10 x 30
A6	0081312L	4	Cap Screw M6 x 12 (W,Lok)
A7	512-2151	2	Locking Nut

515-9630-KIT Differential Kit (1 kit per axle)			
Item	**Part No**	**Qty**	**Description**
B1	0041024HT	8	M10 x 120mm Bolt
B2	055C028U049H	2	Taper Roller Bearing
B3	615-9521	1	Differential Case
B4	400-2110	2	Diff Wheel Thrust Washer
B5	400-2120	4	Diff Pinion Thrust Washer
B6	410-2100	4	Diff Pinion
B7	413-2130	2	Diff Spider
B8	410-2090	2	Diff Wheel
B9	0051006HT	8	M10 Nut Nyloc

516-9580-KIT Planet Kit (1 kit per axle)			
Item	**Part No**	**Qty**	**Description**
C1	400-0250	3	Planet Pin
C2	400-0270	6	Thrust Washer
C3	0562005	3	Needle Roller Bearing
C4	420-0080	3	Planet Gear
C5	512-0060	1	Planet Carrier
C6	010-0030	3	Spring Pin
C7	400-1320	1	Spacer
C8	003-0120	1	Circlip
C9	515-0091	1	Long Arm Sun Gear
C10	420-0070	1	Annulus

512-2511 Service Brake Assembly			
Item	**Part No**	**Qty**	**Description**
D5	512-2500	4	Service Brake Assembly

512-2510-KIT Service Brake Pad Kit (2 kits per axle)			
Item	**Part No**	**Qty**	**Description**
D6	512-2510	4	Service Brake Pads

512-0040-KIT (ALL AXLES PRIOR TO BATCH W14456) Wheel Hub Kit (2 kits per axle)			
Item	**Part No**	**Qty**	**Description**
D2	009-0230	1	Lock Washer
D4	0540751H	2	Taper Roller Bearing
D12	0431303V	1	Viton “O” Ring
D13	512-0450	8	9/16 UNF x 18 Wheel Stud
D14	512-0040	1	Wheel Hub / Brake Disc
D15	417-2850	1	Oil Seal

515-2520-KIT Park Brake Conversion Kit (1 Kit Per Axle)			
Item	**Part No**	**Qty**	**Description**
E1	515-2181	1	Rotor
E5	400-0910	1	Seal Cover (Fitted to 612-2181)
E2	400-2190	1	Washer
E3	400-2200	1	M42 x 2 Nyloc Nut
E9	512-2520	1	Park Brake Assembly (Including Bolts and Nuts)

613-2530-KIT Park Brake Pad Kit (1 Kit Per Axle)			
Item	**Part No**	**Qty**	**Description**
E9.4	613-2530	2	Park Brake Pads

515-0040-KIT (ALL AXLES BATCH W14456 ONWARDS) Wheel Hub Kit (2 kits per axle)			
Item	**Part No**	**Qty**	**Description**
D2	009-0230	1	Lock Washer
D4	0540751H	2	Taper Roller Bearing
D12	0431303V	1	Viton “O” Ring
D13	512-0452	8	9/16 UNF x 18 Wheel Stud
D14	515-0040	1	Wheel Hub / Brake Disc
D15	613-2850	1	Oil Seal Viton

515-9820-KIT Crown Wheel & Pinion (1 kit per axle)			
Item	**Part No**	**Qty**	**Description**
F1	400-1050	1	Spacer
F2	055CU024H	2	Taper Roller Bearing
F3	618-9820	1	Crown Wheel & Pinion
F4	057340A	2	SHIM .002” (Qty As Required)
F5	057340B	2	SHIM .003” (Qty As Required)
F6	057340C	2	SHIM .010” (Qty As Required)
F7	002-0070V	2	Oil Seal - Viton

515-0022KIT Short Arm Leaf Spring Right Hand Assembly (1 kit per axle)			
Item	**Part No**	**Qty**	**Description**
D2	009-0230	1	Washer M70 SKF MB14
D3	435-1440	1	Spacer
D4	0540751H	2	Taper Roller Bearing
D5	512-2500	2	Service Caliper & Pad
D7	0081740P	8	Cap Screw M16 x 40 Patch
D8	512-2400	1	Brake Caliper Bracket
D10	0081525P	8	Cap Screw M10 x 25 Patch
D20	516-0022	1	Short Arm Leaf Spring Right Hand
D11	512-0102	1	Short Axle Shaft
D12	0431303V	1	Viton “O” Ring
D13	512-0452	8	9/16” UNF x 18- 3A Wheel Stud 82mm
D14	515-0040	1	Wheel Hub
D15	613-2850	1	Oil Seal - Viton
D16	512-2192	8	Caliper Carrier Washer
D18	0041210HTP	12	Bolt M12 x 35 Long
D19	007-0400	8	9/16” UNF x 18- 3A Wheel Nut

515-0023KIT Short Arm Leaf Spring Left Hand Assembly (1 kit per axle)			
Item	**Part No**	**Qty**	**Description**
D2	009-0230	1	Washer M70 SKF MB14
D3	435-1440	1	Spacer
D4	0540751H	2	Taper Roller Bearing
D5	512-2500	2	Service Caliper & Pad
D7	0081740P	8	Cap Screw M16 x 40 Patch
D8	512-2400	1	Brake Caliper Bracket
D9	516-0023	1	Short Arm Leaf Spring Left Hand
D10	0081525P	8	Cap Screw M10 x 25 Patch
D11	512-0102	1	Short Axle Shaft
D12	0431303V	1	Viton “O” Ring
D13	512-0452	8	9/16” UNF x 18- 3A Wheel Stud 82mm
D14	515-0040	1	Wheel Hub
D15	613-2850	1	Oil Seal - Viton
D16	512-2192	8	Caliper Carrier Washer
D18	0041210HTP	12	Bolt M12 x 35 Long
D19	007-0400	8	9/16” UNF x 18- 3A Wheel Nut

All spares are available from your local Newage distributor. Check our website www.newage-prm.com to find your closest distributor.

Other spares are available upon request; however these may not be carried by the distributor as standard stock and may incur a delivery lead-time.

SPIRAL BEVEL GEAR TOOTH CONTACT

Contact may vary, but generally is approximately in the tooth centre, equi-spaced between root and tip. The marking may be towards toe on some gears on both flanks or marking crossed slightly i.e. towards toe on convex flank and heel on concave flank or vice versa.

Apply gear marking compound on both sides of 7 to 10 teeth on the Crown Wheel (B10). Whilst applying resistance to the Pinion (B10) rotate the Crown Wheel back and forth (Not Full revolutions) until a clear contact pattern is shown. Compare the contact pattern to the illustrations below and re-shim the Pinion Bearing bore in the Main Case (A3).

If the Taper Roller Pinion Bearing (B9) is Re-shimmed (B12) the backlash must be re-set between the Crown Wheel and Pinion (B10).

Go back and repeat all procedures in setting the backlash.

Correct Pattern

Incorrect Pattern

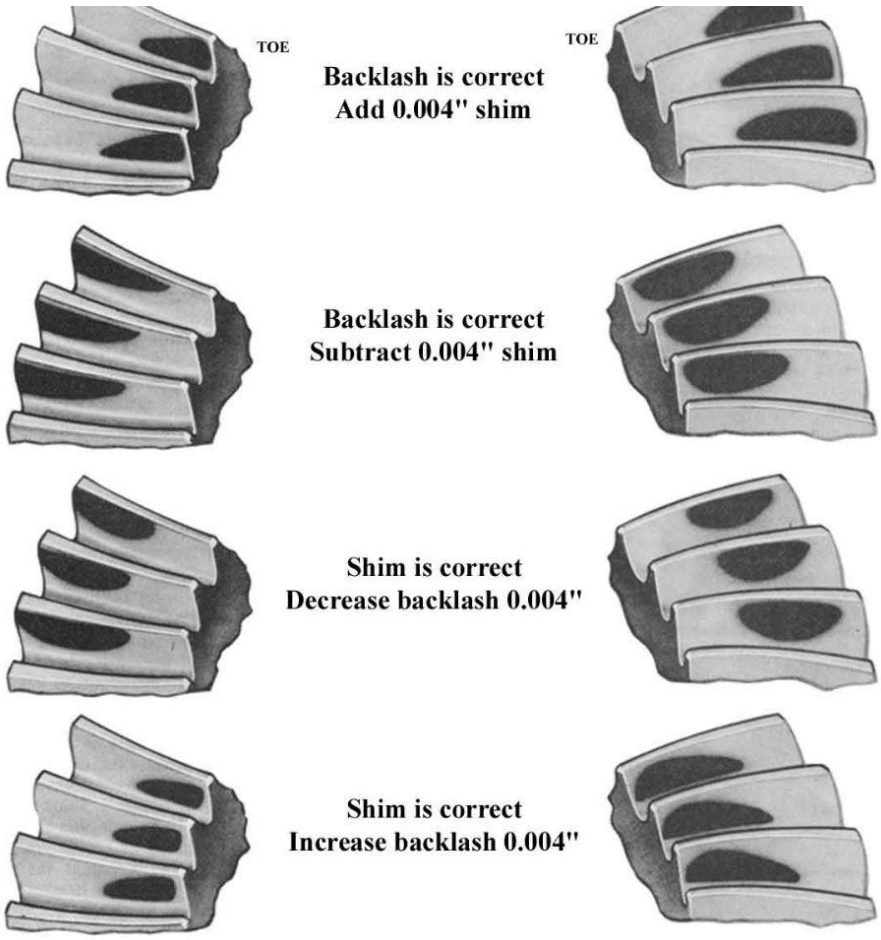

Appendix 1

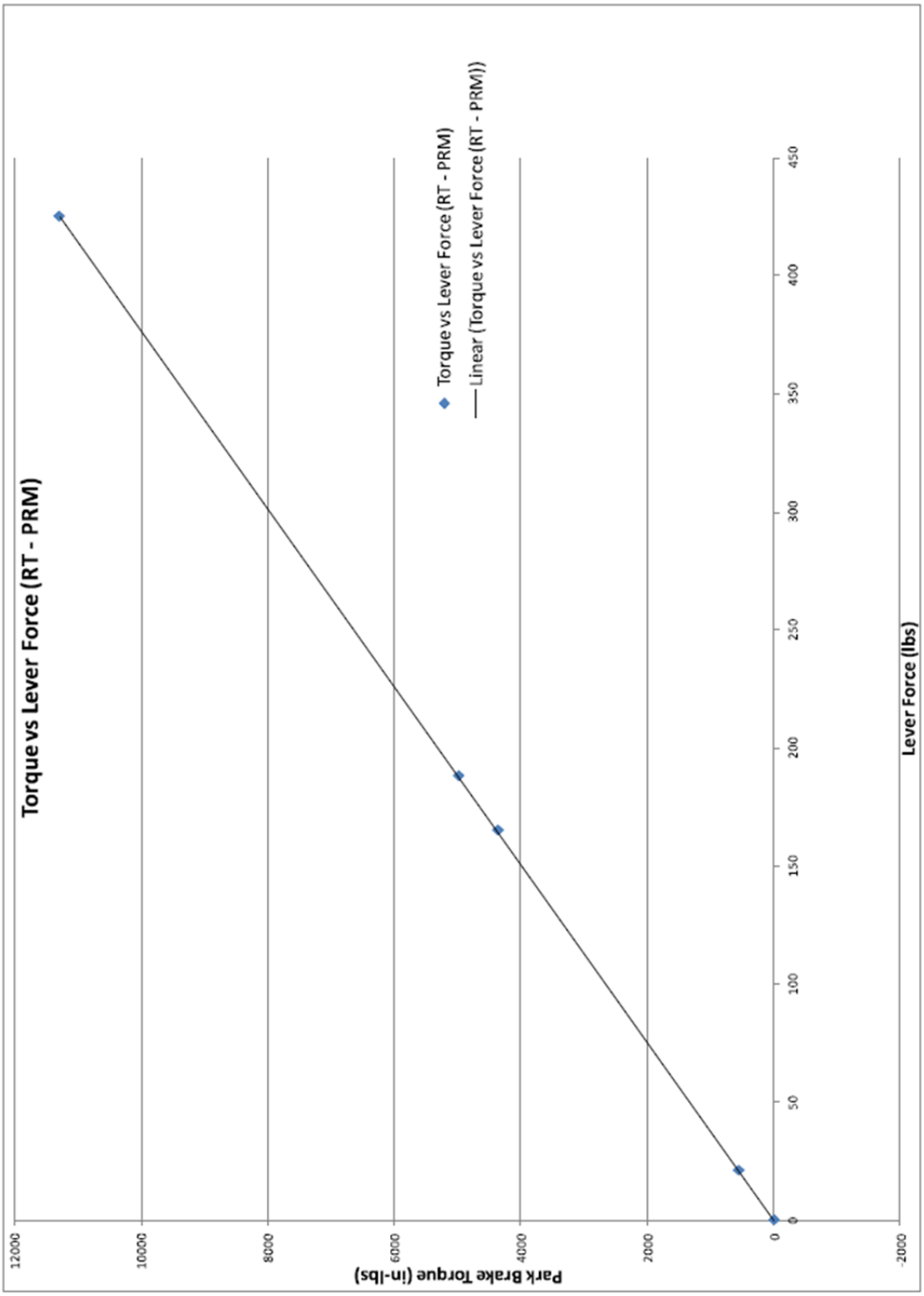
Torque vs Lever Force (RT - PRM)
Torque vs Lever Force (RT - PRM)
Linear (Torque vs Lever Force (RT - PRM))
Park Brake Torque (in-lbs)
12000
10000
8000
6000
4000
2000
0
-2000
0
50
100
150
200
250
300
350
400
450
Lever Force (lbs)

Appendix 2

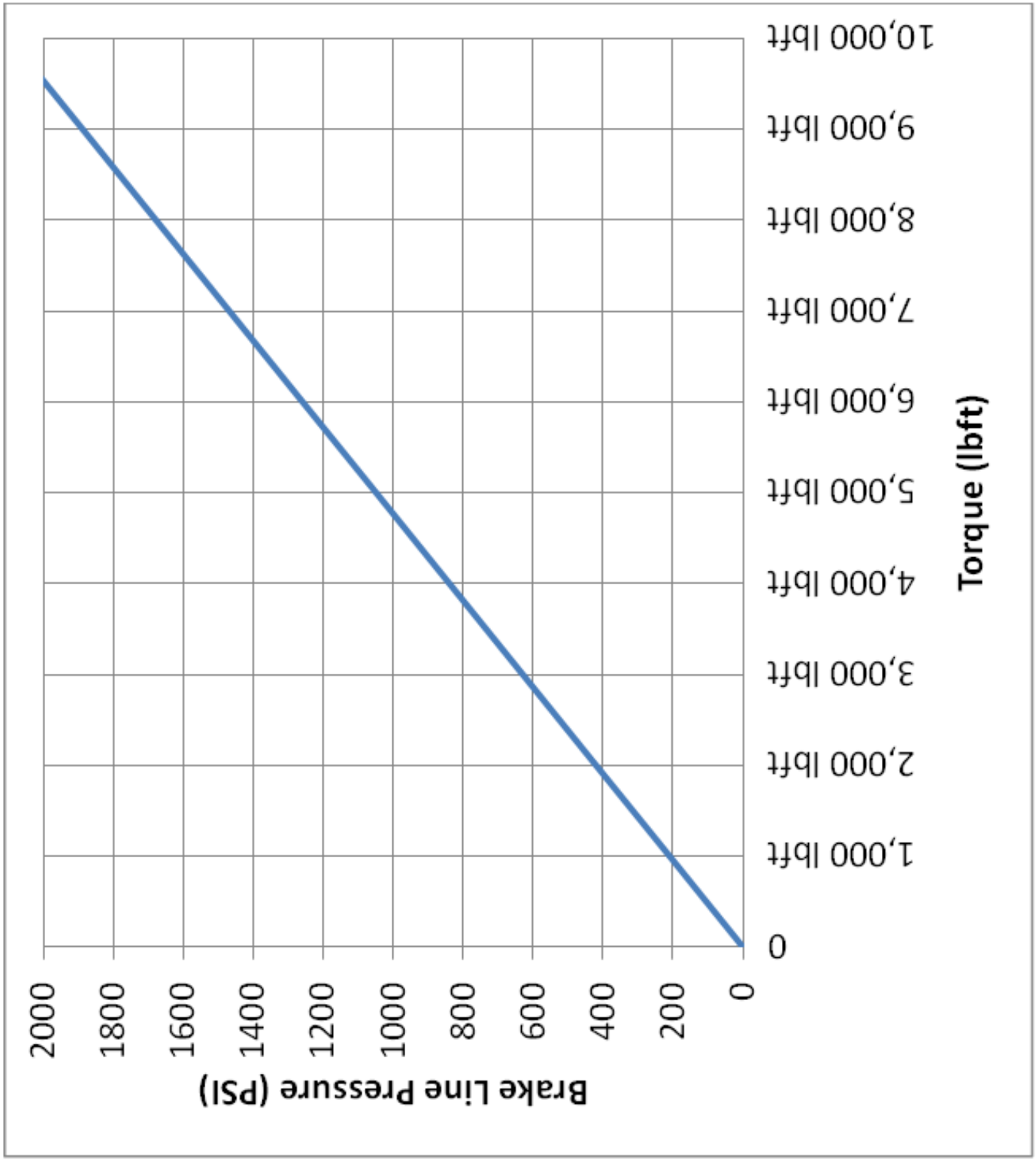
Brake Line Pressure (PSI)
2000
1800
1600
1400
1200
1000
800
600
400
200
0
0
1,000 lbft
2,000 lbft
3,000 lbft
4,000 lbft
5,000 lbft
6,000 lbft
7,000 lbft
8,000 lbft
9,000 lbft
10,000 lbft
Torque (lbft)

NOTES