PART No	915B16B121INST	CAD

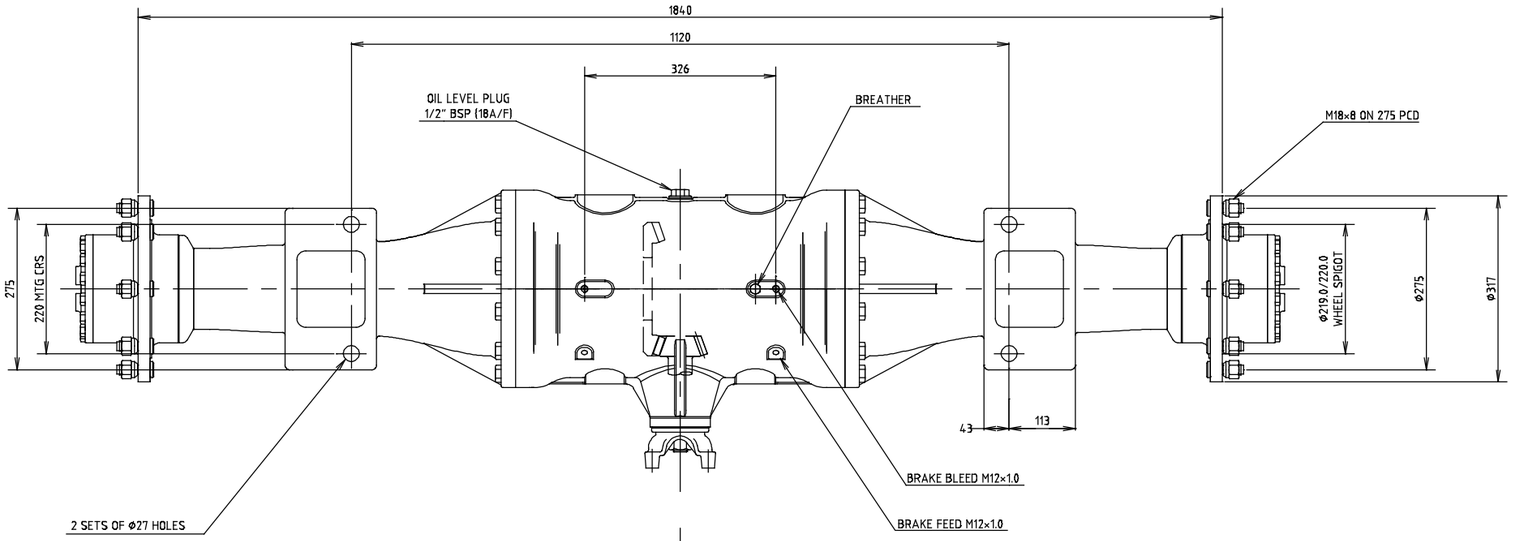

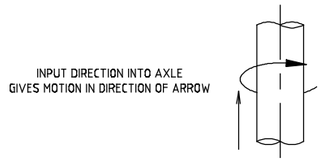

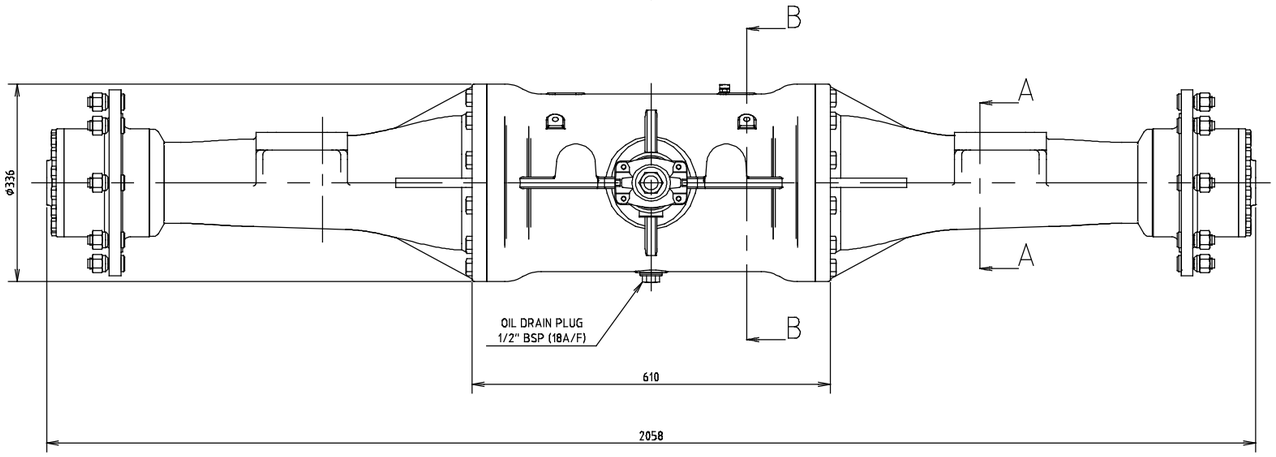

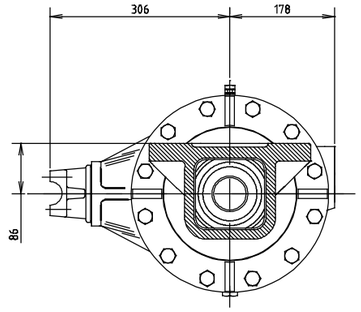

SECTION A-A

BRAKE LEVER SHOWN IN ENGAGED POSITION

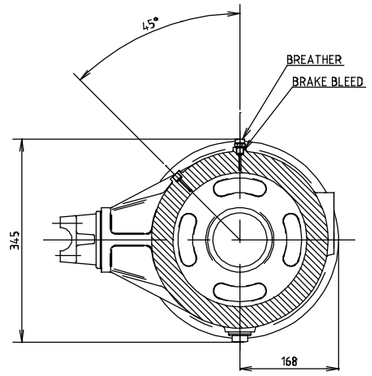

SECTION B-B

BRAKE LEVER SHOWN IN ENGAGED POSITION

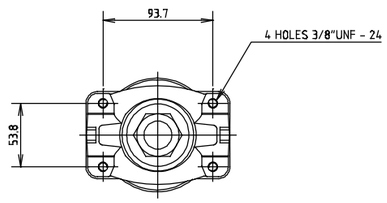

1480 YOKE DETAIL

SCALE 1:2.5

NOTES
1. MAXIMUM LOAD: 10000Kg (16280lb) AT 1840 TRACK WIDTH
2. NOMINAL OUTPUT TORQUE AT 2 WHEELS 32373Nm (238741bft)
3. OVERALL RATIO 15.8:1
4. LUBRICATING OIL:
   USE MOBIL FLUID 422 OR AN ENGINEERING APPROVED EQUIVALENT
   ESTIMATED CAPACITY 15litres (26.4pints)
5. AXLE IS SYMMETRICAL ABOUT DATUM 'X' APART FROM BREATHER
6. BRAKES: MAXIMUM TORQUE AT 2 WHEELS
   28792Nm (21233lbsft)
7. BRAKE HYDRAULIC OPERATING PRESSURE- 60bar (900lbs/sq inch)
8. HYDRAULIC MINERAL FLUID: ISO - VG32 SPEC
9. APPROXIMATE DRY WEIGHT IS 405Kg (893lb)

ISSUE No	MODIFICATION
CAD FILE No :	H:\AXLES\915RF\915B16B121INST.DWG

MATERIAL

HEAT TREATMENT

THE INFORMATION CONTAINED ON THIS DRAWING
MUST NOT BE COPIED OR LENT WITHOUT PERMISSION
COPYRIGHT © 2000 NEWAGE TRANSMISSIONS LIMITED.

UNLESS OTHERWISE STATED;
1, ALL DIMENSIONS ARE IN mm.
2, TOLERANCES : WHOLE DIMn ±1mm
DECIMAL DIMn ±0.25mm : ANGULAR DIMn ±0.5°
3, SURFACE FINISH 6.3 micron C.L.A.

DO NOT SCALE
IF IN DOUBT ASK

PROJECTION ;

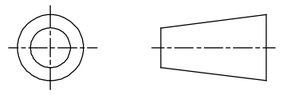

SCALE		NAME	SIGNED	DATE
1:5	DRAWN	E DAY.		14/03/01
SHEET SIZE	APPROVED			

NEWAGE TRANSMISSIONS LIMITED
BARLOW ROAD, COVENTRY, ENGLAND, CV2 2LD. TEL (024) 7661 7141 Email design@newage-prm.co.uk

TITLE
915B 2 BOLT PAD BENFORD SPEC. 1840 TRACK, 1120 MTG CRS. INST.

A1

PART No 915B16B121INST

ISSUE A